Section 12.3

p. 572: 3, 4, 6, 9-13, 14

#3 Find the Radius of a sphERE whose Surface area is 144π

$T.A._{sphere} = 4\pi r^2$

$\frac{144\pi}{4\pi} = \frac{4\pi r^2}{4\pi}$

$36 = r^2$

$\boxed{6 = r}$

#4 Find the total AREA

a.

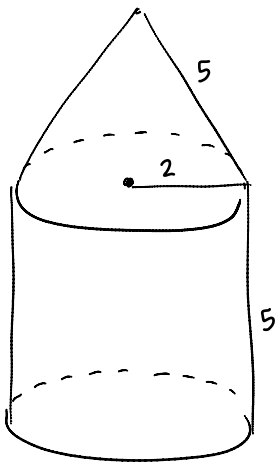

$L.A._{cone} = \frac{cl}{2}$

$= \frac{4\pi \cdot 5}{2}$

$= \frac{20\pi}{2}$

$= 10\pi$

$L.A._{cyl} = c \cdot h$

$= 2\pi(2) \cdot 5$

$= 4\pi \cdot 5$

$= 20\pi$

$A_o = \pi(2)^2$

$= 4\pi$

$T.A = 10\pi + 20\pi + 4\pi$

$= \boxed{34\pi u^2}$

b.

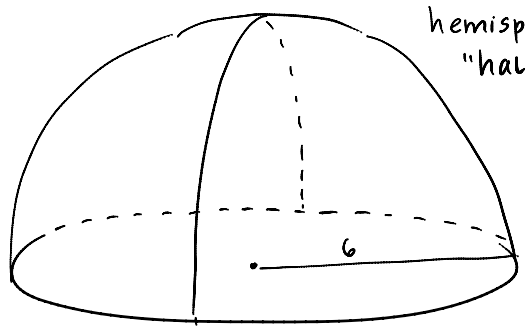

hemisphere
"half sphere"

$T.A._{sphere} = 4\pi(6)^2$

$= 4\pi \cdot 36$

$= 144\pi / 2 = 72\pi u^2$

$A_{base} = \pi(6)^2 = 36\pi u^2$

$T.A. = 72\pi + 36\pi = \boxed{108\pi u^2}$

#6 Find the total surface area of a half cylinder with a Radius of 5 and a height of 2.

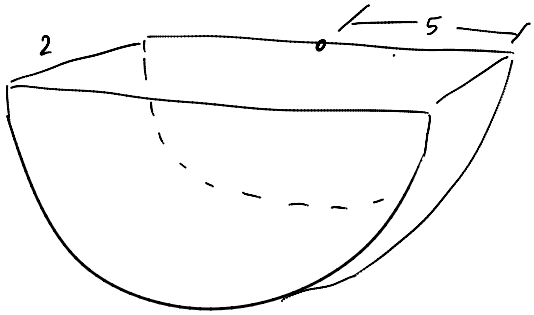

$A_{\odot} = \pi(5)^2$

$= 25\pi$

$A_{cyl} = 2\pi(5) \cdot 2$

$= 10\pi \cdot 2$

$= 20\pi / 2 = 10\pi$

#9 What size LABEL (length and width) will just fit on a can 8 cm in diameter and 14 cm high.

$L.A. = 2\pi r \cdot h$
$= 2\pi(4) \cdot 14$
$= 8\pi \cdot 14$

$\boxed{8\pi \text{ cm by } 14 \text{ cm}}$

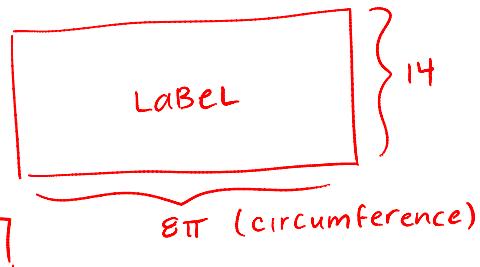

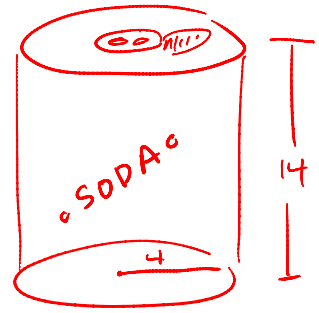

#10

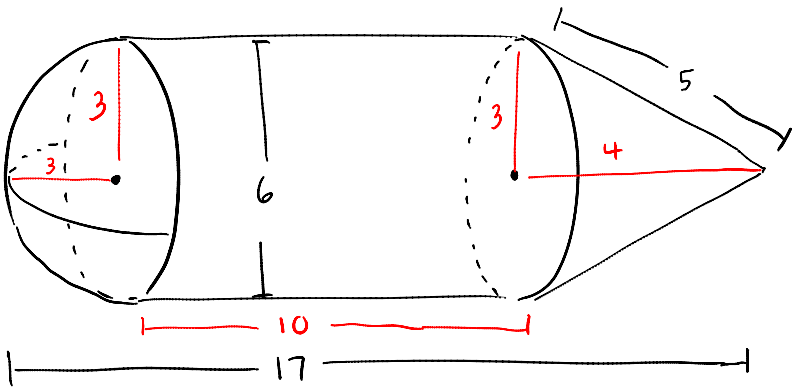

$T.A._{sphere} = 4\pi(3)^2$
$= 36\pi / 2 = 18\pi$

$L.A._{cyl} = 2\pi(3) \cdot 10$
$= 6\pi \cdot 10$
$= 60\pi$

$L.A._{cone} = \dfrac{6\pi \cdot 5}{2}$
$= 15\pi$

$T.A. = 18\pi + 60\pi + 15\pi = \boxed{93\pi \, u^2}$

#11 KITE is a kite

a. Find the area of the KITE

$A = \dfrac{8 \cdot 16}{2} = \boxed{64}$

b. Find the area of the rectangle formed when consecutive midpts of the sides KITE are connected $\boxed{32}$

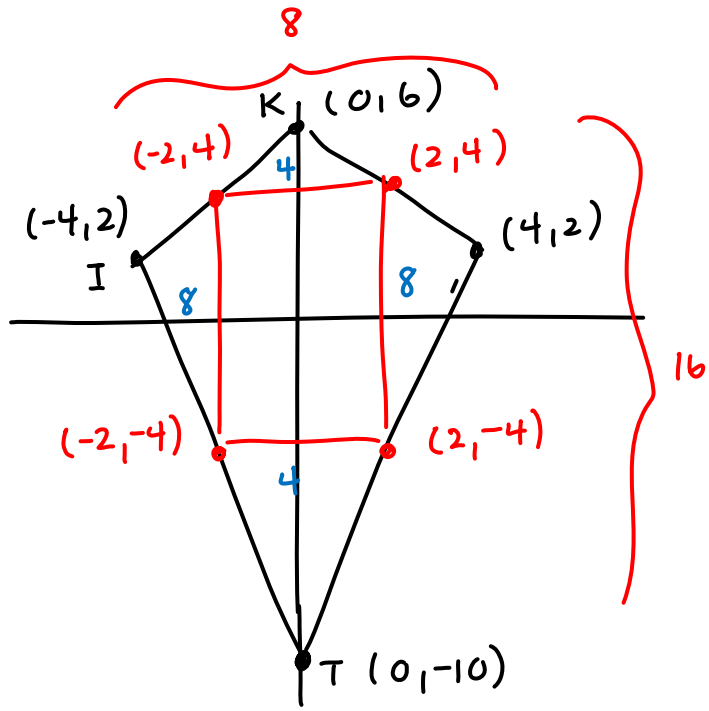

#12

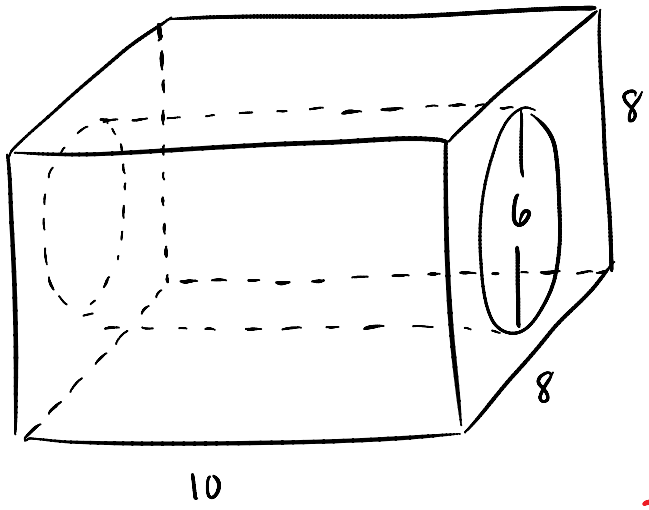

$L.S.A._{prism} = 32(10)$
$= 320$

$A_{face} = 64 - 9\pi$

$L.S.A._{cyl} = 6\pi \cdot 10$
$= 60\pi$

$T.S.A. = 320 + 2(64 - 9\pi) + 60\pi$
$= 320 + 128 - 18\pi + 60\pi$
$= \boxed{448 + 42\pi}$

#13 The solid is called a frustum of a cone. find total area

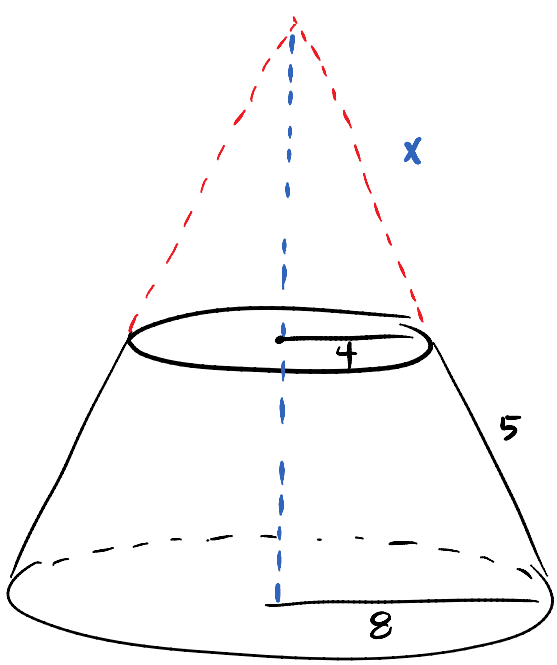

$\frac{4}{8} = \frac{x}{x+5}$

$8x = 4x + 20$
$4x = 20$
$x = 5$

$L.S.A._{\text{top cone}} = \frac{1}{2} \cdot C\,l$
$= \frac{1}{2}(8\pi)5$
$= 20\pi$

$A_{\text{top Base}} = \pi(4)^2 = 16\pi$

$L.S.A._{\text{whole cone}} = \frac{1}{2}(16\pi)(10)$
$= 80\pi$

$A_{\text{Bottom Base}} = \pi(8)^2 = 64\pi$

$T.S.A = 60\pi + 16\pi + 64\pi = \boxed{140\pi}$

#14 A surface of rotation is generated by revolving a shape about a fixed line, called the axis of rotation. For example, revolving a half circle about the line containing its endpts produces a sphere

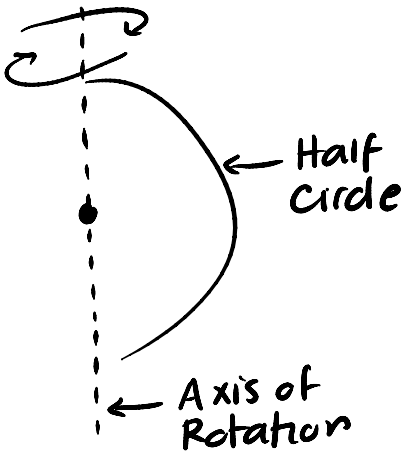

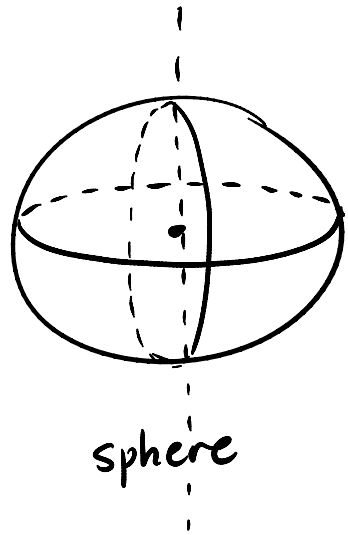

Identify the surface of rotation generated in each diagram below and compute the total area of each of these surfaces.

a.

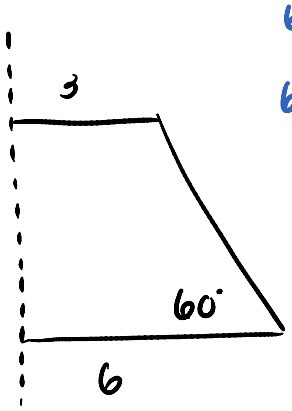

$$\frac{3}{6} = \frac{x}{12}$$

$$6x = 36$$

$$x = 6$$

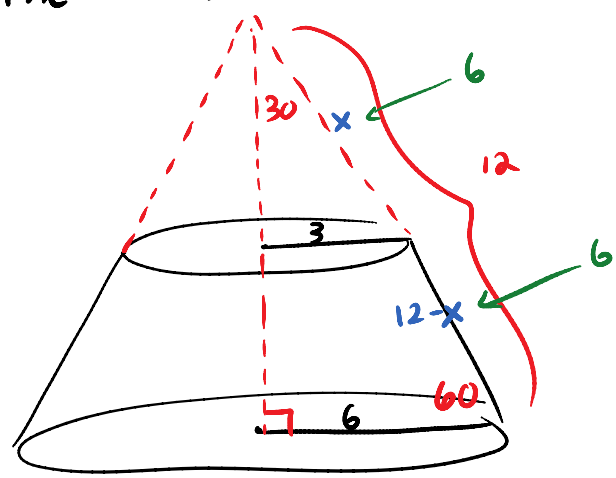

$$L.S.A_{\text{top cone}} = \frac{1}{2}Cl = \frac{1}{2}(6\pi)(6) = 18\pi$$

$$L.S.A._{\text{whole cone}} = \frac{1}{2}(12\pi)(12) = 72\pi$$

$$A_{\text{top Base}} = \pi(3)^2 = 9\pi \qquad A_{\text{bottom base}} = \pi(6)^2 = 36\pi$$

$$T.S.A = 72\pi - 18\pi + 9\pi + 36\pi = \boxed{99\pi}$$

b.

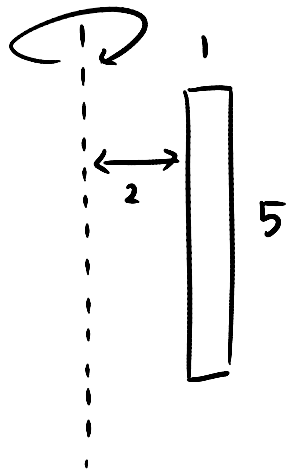

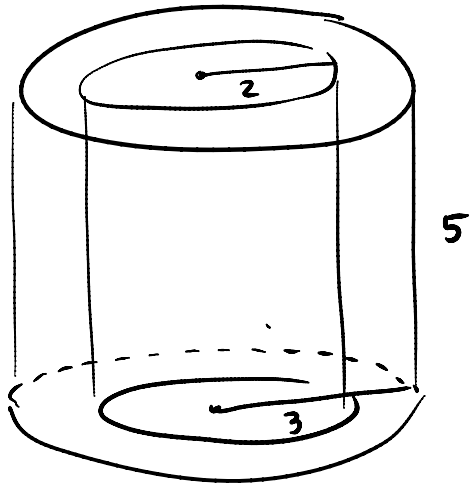

$L.S.A_{\substack{Big\\cyl}} = 6\pi \cdot 5$
$= 30\pi$

$L.S.A._{\substack{small\\cyl}} = 4\pi \cdot 5$
$= 20\pi$

$A_{\odot\, Big} = 9\pi$

$A_{\odot\, small} = 4\pi$

$A_{Base} = 9\pi - 4\pi = 5\pi$

$T.S.A = 30\pi + 20\pi + 5\pi + 5\pi$
$= \boxed{60\pi}$

c.

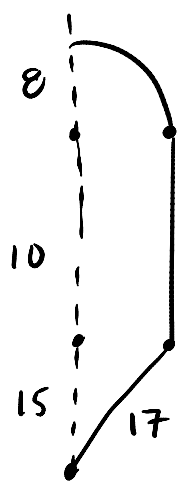

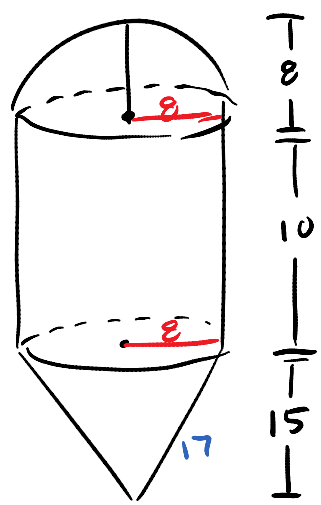

$SA_{hem} = 2\pi r^2$
$= 2\pi(8)^2$
$= 128\pi$

$SA_{cyl} = 16\pi \cdot 10$
$= 160\pi$

$S.A._{cone} = \frac{1}{2}(16\pi)(17)$
$= 136\pi$

$T.S.A = 128\pi + 160\pi + 136\pi$
$= \boxed{424\pi}$